Phone: 800.749.5783 ○ 805.532.0145
Fax: 800.749.5784 ○ 805.532.0125
668 Flinn Avenue, Unit 21 Moorpark, CA 93021
www.platinumtools.com

New!

Standard Modular Plugs

RJ45

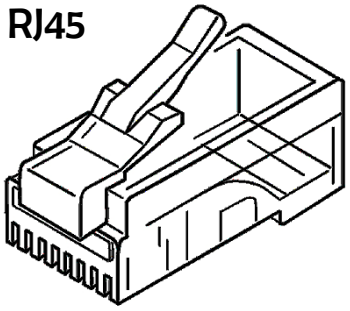

RJ 11, 12

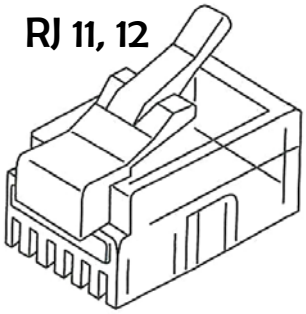

RJ 22

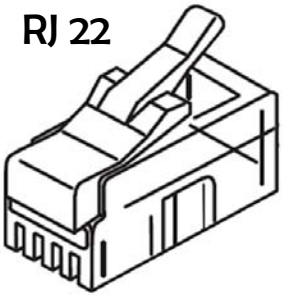

Description

Traditional style modular plugs for use in terminating cables in both telephone and data applications. Manufactured to comply with FCC 68 guidelines and are UL listed.

- Multiple position & contact configuration styles available.
- Round & flat cable versions.
- 2 prong stranded conductor contact.
- 3 prong solid conductor contact.
- Gold plated contacts provide reliable performance and long life.

Application

- Telecommunications.
- Datacommunications.

Technical Data

- Plug Material: Polycarbonate
- Flammability Rating: UL94V-2
- Contact Material: Phosphor Bronze
- Plating: 15µ Gold
- COO Taiwan

Ordering information

Description	Cable Type	Wire Type	500 Pc. Bag	100 Pc. Jar
RJ-22 (4P4C)	Flat	Stranded	106100	106103J
RJ-11 (6P4C)	Flat	Stranded	106110	106113J
RJ-11 (6P4C)	Round	Stranded	106115	106118J
RJ-11 (6P4C)	Round	Solid (3 Prong)	106120	106123J
RJ1-12 (6P6C)	Flat	Stranded	106125	106128J
RJ-12 (6P6C)	Round	Stranded	106130	106133J
RJ-12 (6P6C)	Round	Solid (3 Prong)	106135	106138J
RJ-45 (8P8C)	Flat	Stranded	106140	106143J
RJ-45 (8P8C)	Round	Stranded	106145	106148J
RJ-45 (8P8C)	Round	Solid (3 Prong)	106150	106153J

© Platinum Tools, Inc. 2009

Pub. File #: Mod Plugs Flyer C.pub DATE: 4.17.09 REVISION: C